KING
kingliving.com
Whitehaven Outdoor Umbrella
DT2023124-V3

Whitehaven Outdoor Umbrella

Whitehaven Outdoor Umbrella
Base: 900 (35.5") x 900 (35.5")

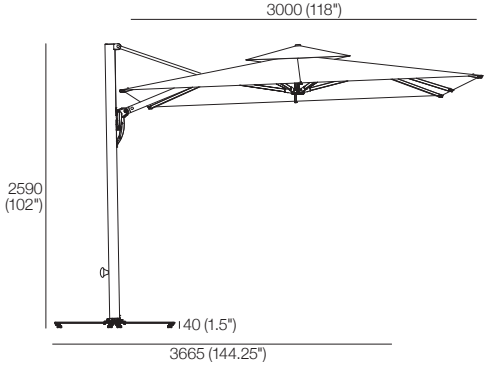

Effective January 2024. Umbrella base and pole available in selected KingCote® finishes. King Living has a policy of continuous improvement, changes to products and specifications may be made without prior notice. Images and drawings are representative of design only. Accessories not included.